LANDWARD
LEADING LIFE FORWARD

XT18

COMPACT FLEXIBLE
POWERFUL DYNAMICS

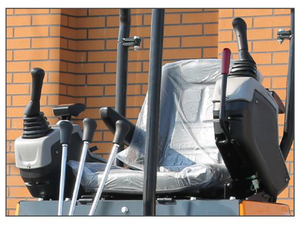

Hydraulic Joystick with armrest

1.Hydraulic safety lock to ensure safe operation

2.Large tilt angle makes it easier to get on and off the vehicle

- **The newly upgraded oil cylinder is above the boomto prevent the oil cylinder from being bumped during work,the hidden oil pipe design makes the appearance neat and beautifui.**
- **Bucket,bucket arm,cylinder guard plate and botton plate are all made of high-strength cast steel.**

Walking motor

Stable driving and strong power

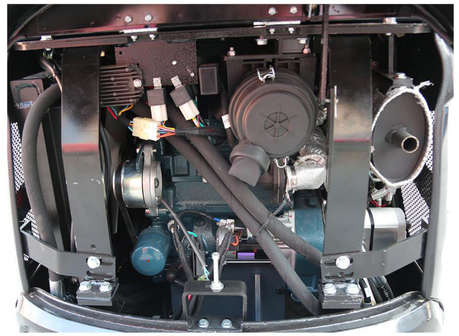

Tail can be opened

1、Convenient inspection and maintenance
2、Three cast iron counterweights to ensure balance during work

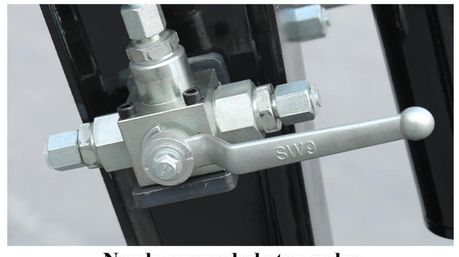

Newly upgraded stop valve

The newly upgraded three-way stop valve can use hydraulic thumb clamps and hydraulic quick changes at the same time.

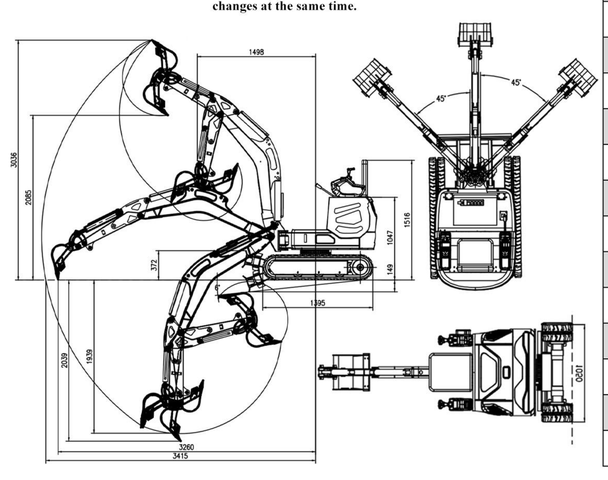

Specifications:

Model	XT18
Operating weight	1780
Bucket capacity	0.025
Engine model	Kubota D722
Rated power (kw/r/min)	10.2KW/2500rpm
Hydraulic pump model	HGP-3AT-F10R/F3R
Max.flow (L/min)	22
Working pressure (Mpa)	18
Control valve model	CDB15-90T-YK
Swing motor model	RMR315
Travel motor model	R6K-310
Fuel tank capacity (L)	9.5
Hydraulic oil tank capacity (L)	13
Travel speed (km/h)	2
Swing speed (r/min)	9
Max. climbing degree (%)	40
A-Overall length (mm)	3320
B-Overall width (mm)	1050
C-Overall height (to top of boom)(mm)	2100
D-Overall height (to top of cab)(mm)	2250
E-Counterweight ground clearance(mm)	380
F-Min. ground clearance (mm)	120
G-Tail swing radius (mm)	850
H-Track ground length(mm)	1200
J-Track length (mm)	1310
K-Track gauge (mm)	660
L-Track width (mm)	1050
M-Track shoe width (mm)	180
N-Turntable width (mm)	930
O-Max. digging height (mm)	3030
P-Max. dumping height (mm)	2080
Q-Max. digging height (mm)	2100
R-Max. vertical wall digging depth (mm)	2100
T-Max. digging reach (mm)	3260
U-Max. digging reach at ground level (mm)	3260
V-Min. swing radius (mm)	1500
X-Distance between center of rotation and tail length (mm)	850
Deflection angle left°/right°	45/45

LANDWARD
LEADING LIFE FORWARD