LANDWARD
LEADING LIFE FORWARD

XT10K

COMPACT FLEXIBLE
POWERFUL DYNAMICS

Mechanical control lever

It mainly includes key components such as left and right operation handles, walking pedals, various switches, and instrument panels.

- **The newly upgraded oil cylinder is above the boomto prevent the oil cylinder from being bumped during work,the hidden oil pipe design makes the appearance neat and beautifui.**
- **Both the oil pipe protective cover and the oil cylinder protective plate are made of high-strength cast steel.**

Canopy　　Anti-tipping frame

Optional

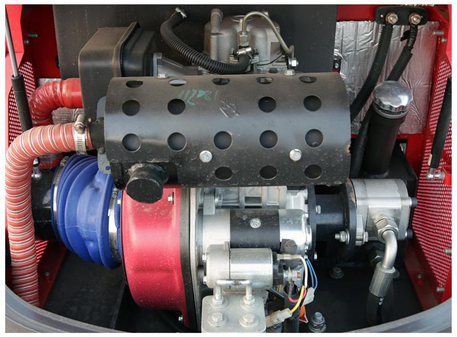

Tail can be opened

1、Convenient inspection and maintenance
2、Three cast iron counterweights to ensure balance during work

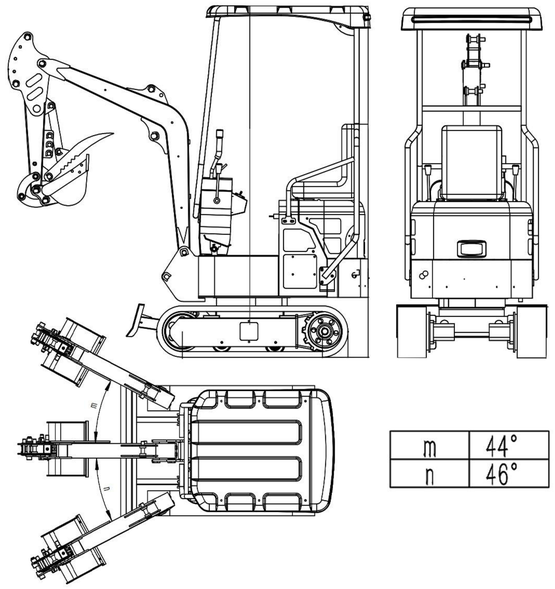

m	44°
n	46°

Specifications:

Model	XT10K
Operating weight	980
Bucket capacity	0.025
Engine model	KOOP192
Rated power (kw/r/min)	7KW/3000rpm
Hydraulic pump model	CBTG-F308-AL
Max.flow (L/min)	24
Working pressure (Mpa)	12.2
Control valve model	CDB15-90T
Swing motor model	RMR-315
Travel motor model	6K310/4K310
Fuel tank capacity (L)	7.6
Hydraulic oil tank capacity (L)	15
Travel speed (km/h)	2.5
Swing speed (r/min)	9
Max. climbing degree (%)	30
A-Overall length (mm)	2240
B-Overall width (mm)	950
C-Overall height (to top of boom)(mm)	2150
D-Overall height (to top of cab)(mm)	2260
E-Counterweight ground clearance(mm)	373
F-Min. ground clearance (mm)	110
G-Tail swing radius (mm)	550
H-Track ground length(mm)	950
J-Track length (mm)	1210
K-Track gauge (mm)	560
L-Track width (mm)	930
M-Track shoe width (mm)	180
N-Turntable width (mm)	760
O-Max. digging height (mm)	2260
P-Max. dumping height (mm)	1600
Q-Max. digging height (mm)	1600
R-Max. vertical wall digging depth (mm)	1460
T-Max. digging reach (mm)	2300
U-Max. digging reach at ground level (mm)	2300
V-Min. swing radius (mm)	1600
X-Distance between center of rotation and tail length (mm)	737
Deflection angle left° /right°	46/44

LANDWARD
LEADING LIFE FORWARD